THIS IS A C.A.D. GENERATED DRAWING
DO NOT MAKE MANUAL REVISIONS TO MASTER.

* UNLESS OTHERWISE SPECIFIED TOLERANCES
ON DECIMAL IS:
UNIT: MM .X ±0.3
.XX ±0.20
.XXX ±0.100

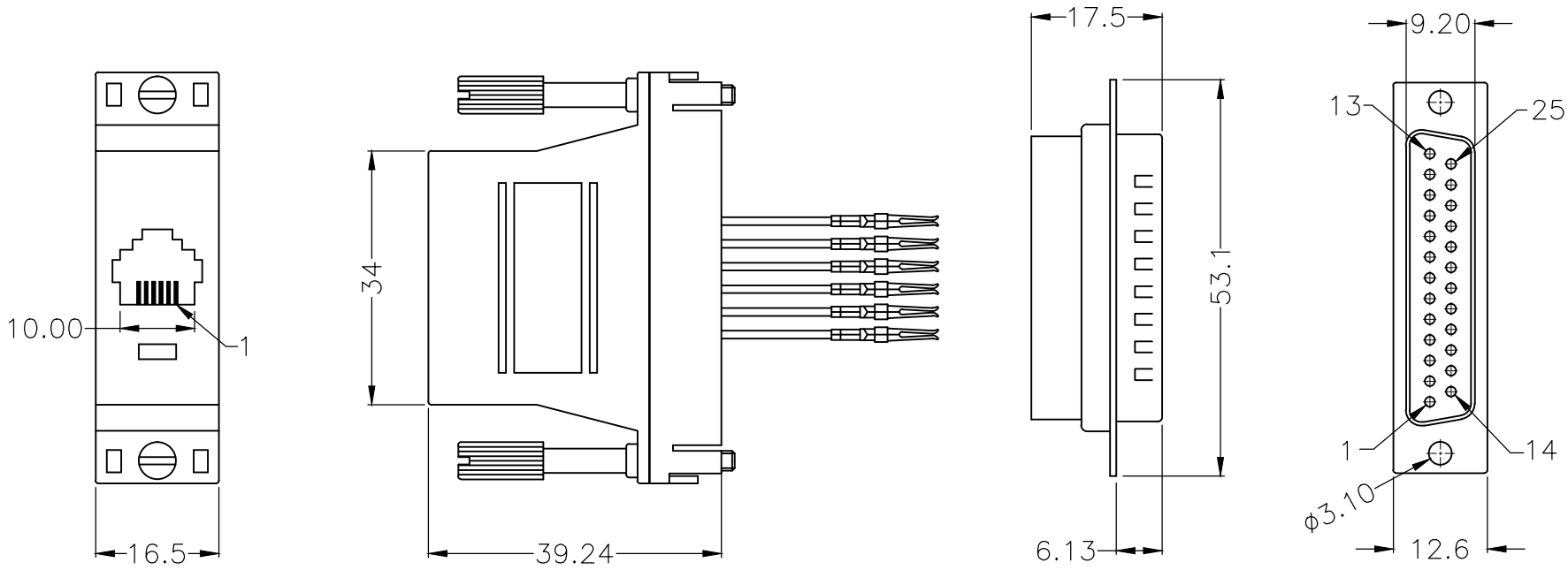

Series
Number of positions
B=For RJ12 to D-SUB 25 male
Color: G=Plastic grey
Screw: L=Long screws
Option

PIN 1-Black	PIN 2-Yellow	PIN 3-Orange
PIN 4-Red	PIN 5-Green	PIN 6-Brown

NO.	DESCRIPTION	MATERIAL	FINISH	QTY
4	LEAD WIRE	UL1061	26AWG 7 STRAND	6
3	LONG SCREW	STEEL	#4-40 NICKEL PLATED	2
2	TERMINAL	COPPER	GOLD PLATED	6
1	HOOD	ABS	UL 94V-HB	1

Ordering information		Unshielded Version
Size	P/N-Kitted	Product Code
25-way	2112-0100-13	MHDA25-PMJ6-K-RC

THESE DRAWINGS AND SPECIFICATIONS ARE THE PROPERTY OF MH CONNECTORS LTD. AND SHALL NOT BE REPRODUCED, COPIED OR USED AS THE BASIS FOR THE MANUFACTURE OR SALE OF APPARATUS WITHOUT WRITTEN PERMISSION.

DRAWN	DATE
HALEY	10-14-13
APPROVED	DATE

RoHS COMPLIANT

THIS SERIES FULLY CONFORMS TO THE EUROPEAN UNION DIRECTIVES 2002/95/EC AND 2002/96/EC FOR RoHS COMPLIANCY.

MH CONNECTORS

MH CONNECTORS LTD.

SCALE	SHEET OF	REV:
	1 OF 1	1.0

DRAWING No
MHDA25-PMJ6-K-RC